BillDa®
EMERGENCY POWER LEADER

Voltech
INTERNATIONAL INC.

EMERGENCY LED DRIVER



RUGBY

EMERGENCY LED DRIVER

100-347Vac

30W/40W/60W

EMERGENCY LED DRIVER

30W/40W/60W

100-347Vac

IMPORTANT SAFEGUARDS

When using electrical equipment, basic safety precautions should always be followed including the following

PLEASE READ AND FOLLOW ALL SAFETY INSTRUCTIONS.

CAUTION: CAUTION: DO NOT JOIN BATTERY CONNECTOR UNTIL INSTALLATION IS COMPLETE AND AC POWER IS SUPPLIED TO THE EMERGENCY INVERTER.

CAUTION: RISK OF SHOCK-disconnect emergency and normal input power sources before servicing.

ASSEMBLY and FIELD INSTALLATION WIRING: WARNING: AC power must be off before proceeding with assembly or installation of emergency driver.

IMPORTANT: An unswitched AC power source is required (100-347V AC, 50/60 Hz).
This device is designed for fixtures listed for dry, damp or wet locations.

IMPORTANT: Please charge the battery consistently for >24 hours for the first time usage so as to activate the whole battery cells of discharging/charging duration.

IMPORTANT: Customers are advised to charge emergency LED drivers 24 hours every 6 months during storage, and which could be stocked for 1 year at most. If customers don't install and recharge for more than one year, the batteries may be damaged. This is not covered in the warranty, and we would charge for replacement.

IMPORTANT: Lighting fixture manufacturers, electricians, and end-users need to ensure product system compatibility test before using and final installation.

IMPORTANT: For BLD-RM30X-YYY suggested to use for LED lamp less than 200W(when diming to minimum. the power needs to be less than 25W).
For BLD-RM40X-YYY suggested to use for LED lamp less than 300W (when dimming to minimum the power needs to be less than 35W)

IMPORTANT: Make sure all connections are in accordance with the National Electrical Code or Canadian Electrical Code and any local regulations.

CAUTION: To reduce the risk of electric shock disconnect both normal and emergency sources within this unit before servicing any equipment connected to this unit

CAUTION: Do not mount near gas or electric heaters.

CAUTION: Equipment should be mounted in locations and at heights where it will not be subjected to tampering by unauthorized personnel.

CAUTION: The use of accessory equipment not recommended by the manufacturer may cause an unsafe condition.

CAUTION: Do not use this equipment for other than its intended use.

CAUTION: Use with grounded, UL Listed, dry or damp location rated fixtures. Case should also be grounded.

CAUTION: This product is for use in indoor fixtures only. Do NOT use near heated air handling outlets or hazardous locations.

Suitable for use in 5°C -50°C ambient temperatures. Max. mounting height: 48.65ft.

CAUTION: Battery is rechargeable Li-ion type and must be recycled or disposed of properly

Do not use this emergency driver with accessory equipment other than recommended by the manufacturer.
Failure to follow this may cause an unsafe condition and will void warranty.
Servicing of this equipment should be performed by qualified personnel only

IMPORTANT: Illuminated Indicator (LED light) means battery is in charge mode when AC power is applied.
It is recommended and required by applicable code to test emergency function to ensure proper operation of the system; press the remote controller ON button every 30 days to ensure the emergency driver is functioning and LED light source is illuminated. Conduct a ninety minute (90) discharge test one time (1) per year;
LED light source should be illuminated for a minimum of ninety minutes (90).

TESTING SYSTEM: The emergency battery requires a minimum charge of one (1) hour before testing the circuit.
A full charge requires twenty four(24) hours.

Features

- Simple wiring: directly connect to AC INPUT of LED driver.
- Constant power output 30W/40W/60W.
- Universal input range,100-347Vac,50/60Hz.
- High output voltage DC 170V .
- Optimized design for UFO highbay fixture,private mold patent design.
- Built-in integrated junction box.
- Protection:over-voltage,short-circuit,over-load,open-circuit.
- Wireless remote control or non-remote control for emergency test are optional.
- UL Listed for field or factory installation.
- Comply with UL924 standard and CSA 22.2, No. 141 for USA and Canada.
- California Energy Commission (CEC) Title 20 with BC compliant.

Model NO.

Model NO	Input Voltage	Emergency power	Emergency Time
BLD-RM30X-YYY	100-347VAC	30W	90minutes
BLD-RM40X-YYY	100-347VAC	40W	90minutes
BLD-RM60X-YYY	100-347VAC	60W	90minutes

Remark: “X” can be “R” or “D”. “R” stands for remote control, “D" stands for non-remote control.
“YYY”Maybe any number or letter or blank for sales purpose.

Specifications

Input Voltage	100-347V AC 50/60Hz	Test switch/charging indicator light	☐ Remote Control ☐ Non-remote Control
Output Voltage	170V DC	Battery	Li-ion battery
Input Current	⩽200mA	Charging time	⩾24hours
Input Power	15W	Output power	☐ 30W ☐ 40W ☐ 60W
Emergency Time	90minutes		
Warranty	5Years	Weight	3.3kg
Ambient Temp	5°C-50°C	Dimensions	273.6 x Φ146mm

EMERGENCY LED DRIVER

30W/40W/60W

100-347Vac

Wiring Diagram

1 With Dimmer

For UFO LED Highbay ⩽ 310W and have 0-10V dimming function

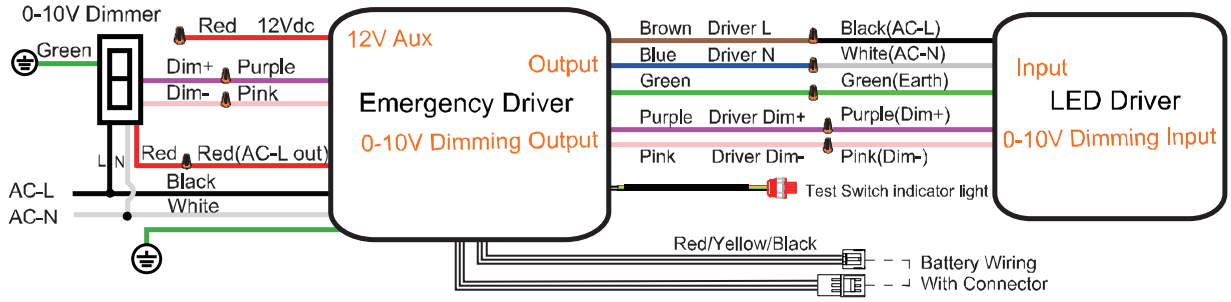

IMPORTANT

Emergency driver 0-10V dimming wires must be connected to UFO LED driver dimming wires for EM to function properly. will NOT operate if not connected.

RECOMMENDATION:

Emergency Output Power≥20% Output Power of UFO LED High Bay

2 With Wall Switch(Without Dimmer)

For UFO LED Highbay ⩽ 310W and have 0-10V dimming function

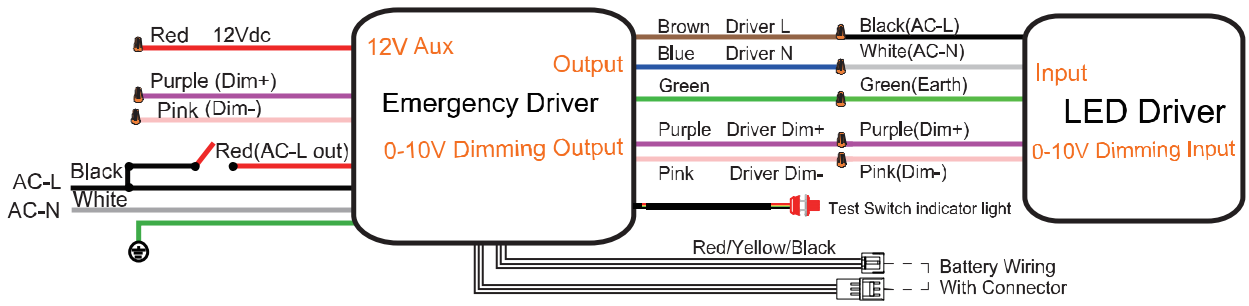

IMPORTANT

Emergency driver 0-10V dimming wires must be connected to UFO LED driver dimming wires for EM to function properly. will NOT operate if not connected.

RECOMMENDATION:

Emergency Output Power≥20% Output Power of UFO LED High Bay

EMERGENCY LED DRIVER

30W/40W/60W

100-347Vac

③ Without Wall Switch&Dimmer, 24hours lighting

For UFO LED Highbay ⩽ 310W and have 0-10V dimming function

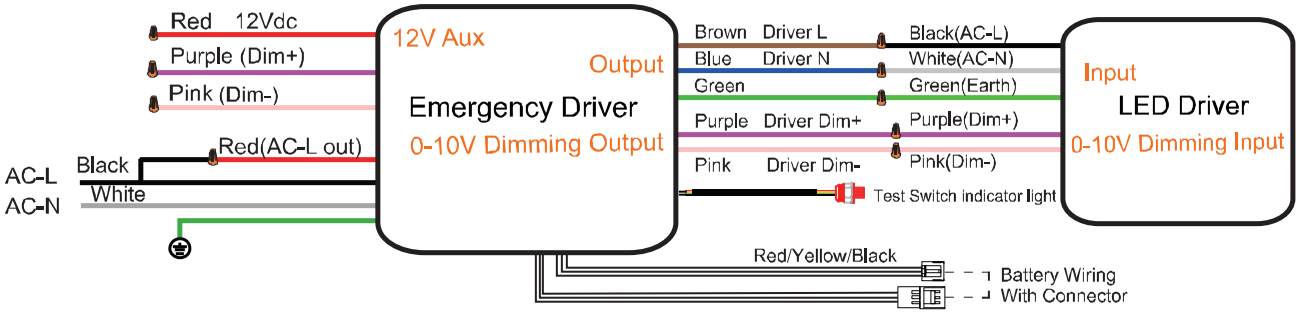

IMPORTANT

Emergency driver 0-10V dimming wires must be connected to UFO LED driver dimming wires for EM to function properly. will NOT operate if not connected.

RECOMMENDATION:

Emergency Output Power≥20% Output Power of UFO LED High Bay

④ With Sensor(100-277/347V AC)

For UFO LED Highbay ⩽ 310W and have 0-10V dimming function

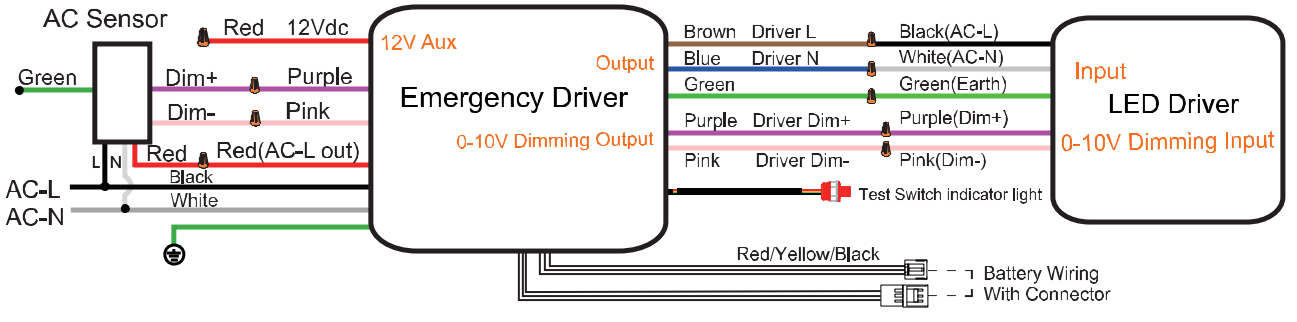

IMPORTANT

Emergency driver 0-10V dimming wires must be connected to UFO LED driver dimming wires for EM to function properly. will NOT operate if not connected.

RECOMMENDATION:

Emergency Output Power≥20% Output Power of UFO LED High Bay

EMERGENCY LED DRIVER

30W/40W/60W

100-347Vac

Wiring Diagram

5 With 12VDC Sensor

(The current is less than 30mA, and 12Vdc sensor must connect to emergency LED driver's 12Vdc wire,can't connect to UFO LED driver's 12Vdc wire. Please plug in the DC12V sensor before connecting to the mains.)

For UFO LED Highbay ⩽ 310W and have 0-10V dimming function

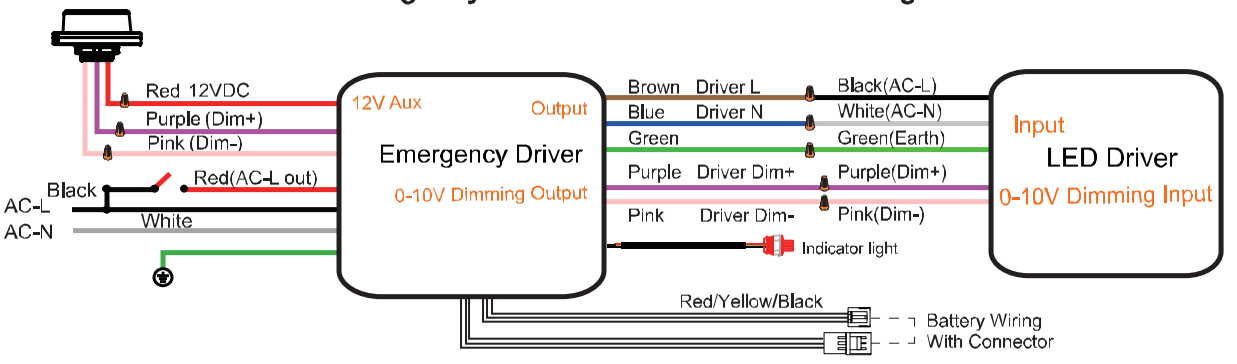

IMPORTANT

Emergency driver 0-10V dimming wires must be connected to UFO LED driver dimming wires for EM to function properly. will NOT operate if not connected.

RECOMMENDATION:

Emergency Output Power≥20% Output Power of UFO LED High Bay

INSTALL STEPS

Step #1

Disconnect all power sources to the lighting fixture and ensure they are locked out during installation and maintenance.

The LED driver must be sourced from the LED emergency driver.

Select a suitable location on the ceiling with hangable device.

Step#2

(A) Install the ring bolt to the top thread hole of LED emergency driver and fix it with screw.

(B1) Install the G-hook/Ring bolt/M10-rod/M12-rod to the Bottom thread hole of LED emergency driver and fix it with screw.

(B2) Install the Rod to the Bottom thread hole of LED emergency driver and fix it with screw.

(C) Install the LED emergency driver to UFO highbay fixture with screw.

Open the LED emergency cover and remove the plastic covers and install the waterproof connectors

Step#3

Pull all wires through the waterproof connectors into the Cavity of emergency driver.

(A): Connect the AC output wires (Brown,Blue and Green) of emergency driver with AC input wires of LED lighting fixture.

(B): Connect the dimming output wires (Purple and Pink) of emergency driver with the dimming input wires of LED Driver.

(C): Connect AC input wires (Black,White and Red) of emergency driver with AC main power cord.

(D): Connect the input dimming wires (Purple,Pink) of emergency driver with dimming wires from dimmer.

Make sure all connections are with orange wiring caps in accordance with manufacture's installation manual.

Lock up the cover of junction box.

(E): After all the wiring connections,and then connect the battery cable with quick connectors.

Operation Instructions

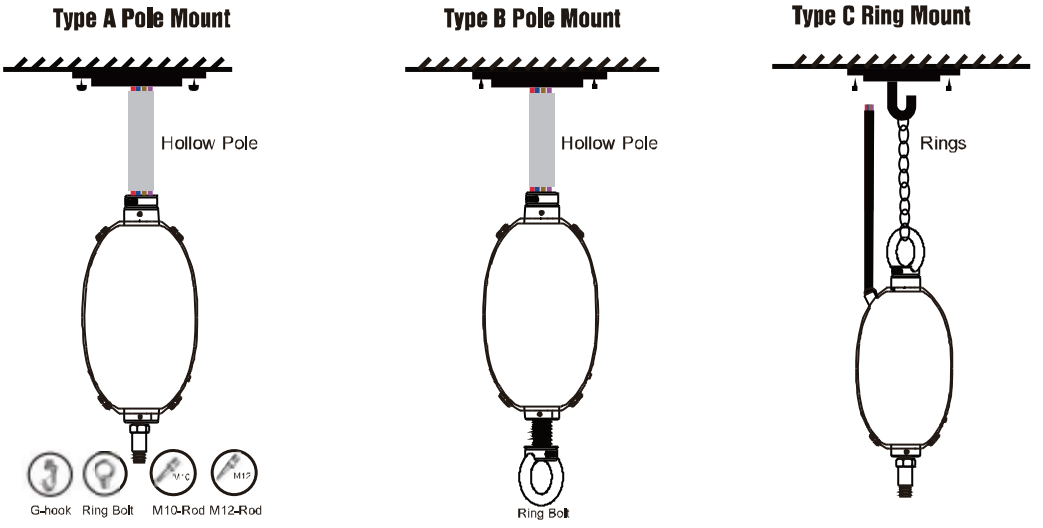

See instruction manual,for typical installation and select appropriate mounting method.

Instructions For Remote Control

ON

Non-Remote version:

Test Switch & Indicator
Green ON: Charging mode
Green OFF: Discharging mode

Note: AC power on, click the test switch, switch to emergency mode , then automatically back to the working mode of AC power supply.

Remote version:

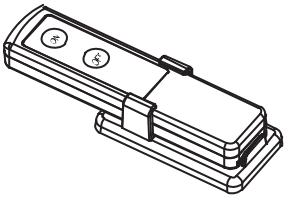

Test Switch & Indicator
RED ON: Charging mode
RED OFF: Discharging mode

Remote control
Press the ON button to test emergency function. The light will switch to its emergency lighting and indicator light will turn off. Press the OFF button, the light will recover to normal lighting.
Note: Remote must be pointed at the indicator light and be within a 45 degree angle to receive a signal/command. Remote needs two AAA batteries to operate (not included).

Size

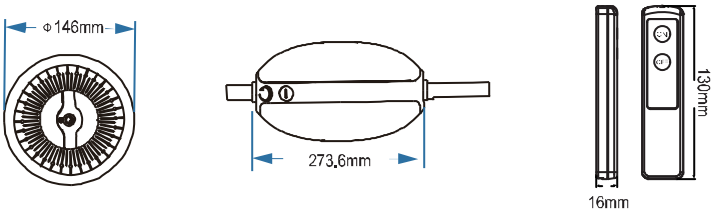



The BillDa BLD-RMXXX-YYY series LED emergency drivers are designed for use with UFO LED high fixtures with 0-10V dimmable LED drivers , it allows the LED UFO high bay to be used for both normal and emergency operation.

c UL us
LISTED
E493915

BC

Li-ion

THIS PRODUCT CONTAINS A RECHARGEABLE LITHIUM BATTERY.
THE BATTERY MUST BE RECYCLED OR DISPOSED OFF
PROPERLY.