# TLCDLUS4R12AWH

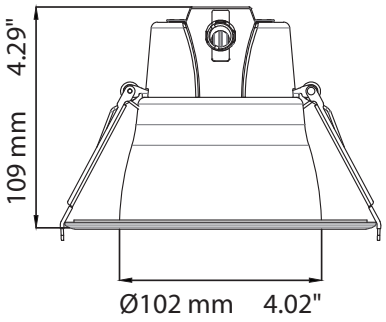


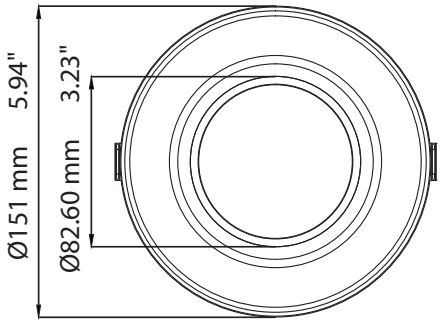




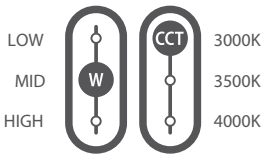




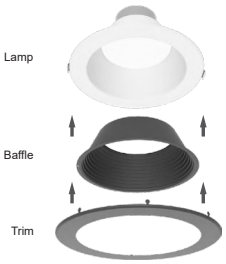


**Optional accessories**

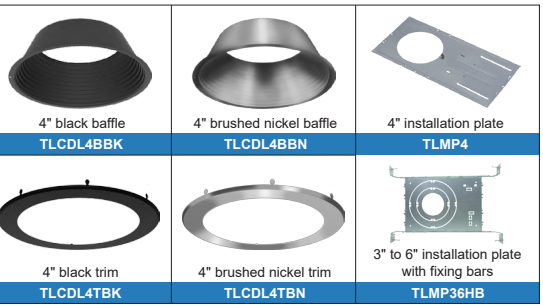


## Specifications TLCDLUS4R12AWH

| Electrical Specifications | |
|---|---|
| Model No. | TLCDLUS4R12AWH |
| Power (W) ± 10% | 5.5 W / 8 W / 12.5 W |
| Input Voltage (V) | AC 120-347V, 50/60Hz |
| Efficacy ± 3% | 82 lm/W |
| Power Factor (PF) | >0.9 |
| Dimmable | 0-10V |

| Photometric Specifications | | |
|---|---|---|
| CRI | ≥90 | |
| CCT | 3 000 K / 3 500 K / 4 000 K | |
| Beam angle | 90° | |
| Light Output ± 3% | 5.5W: 500 lm | 8W: 700 lm |
| | 12.5W: 1025 lm | |

| Mechanical Specifications | |
|---|---|
| IP Rating | Wet locations |
| Material | Aluminum |
| Lens | Frosted |
| Net Weight | 408 g |
| Product size (mm) | ± Ø151 x 109 mm |
| Product size (inch) | ± Ø5.94" x 4.29" |
| Operating Humidity | 10% - 90% |
| Operating Temperature | -20°C ~ 40°C |
| Lumen maintenance | >71% at 100 000 hours |

## Product Description:

- 4" recessed down light, type IC.
- 102 mm (4") hole required for installation.
- BX 24" cable with connector included.
- Selectable power and CCT using a switch.
- Ultra thin 4" recessed down light.
- Color: white.
  Possibility to customize colors using optional accessories.

## Applications:

Shopping centers, residential buildings, hotels, schools, houses, etc.

info@technilight.ca



Pictures for illustration purpose only rev 2.6.4