TLEPEL521

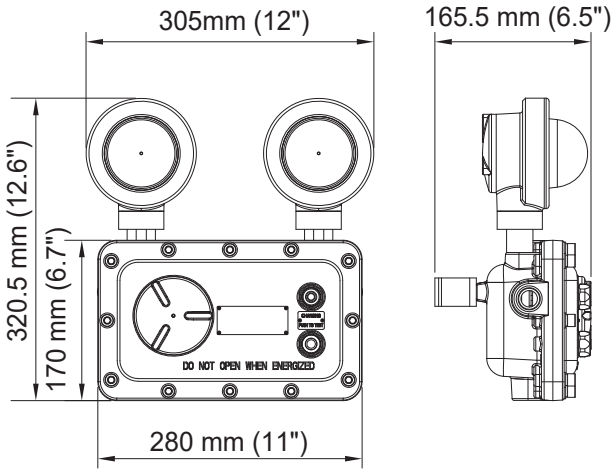

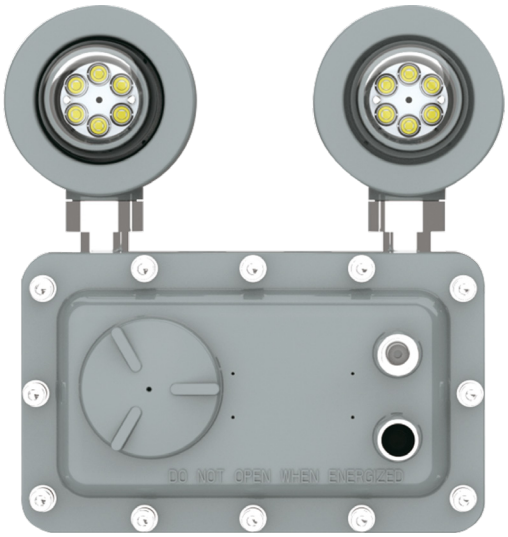

Specifications TLEPEL521

Electrical Specifications	
Model No.	TLEPEL521
Consumption (W) ±10%	10 W
Emergency consumption (W) ±10%	7 W
Remote capacity	No
Input Voltage (V)	AC100-277V, 50/60Hz
Efficacy ± 3%	100 lm/W
Power Factor (PF)	N/A
Emergency duration	180 minutes
Recharge time	24 hours
Operation mode	Non-maintained

Photometric Specifications	
CRI	N/A
CCT	5 000 K
Beam angle	90°
Light Output ± 3%	1000 lm

Mechanical Specifications	
IP Rating	NEMA 4X / IP66 / IK10
Material	Aluminum + stainless
Lens	Tempered glass
Net Weight	8 kg
Product size (mm)	± 305 x 320.5 x 165.5 mm
Product size (inch)	± 12" x 12.6" x 6.5"
Operating Humidity	10% ~ 90%
Operating Temperature	-40°C ~ 65°C
Battery	N/D
Lifespan	>50 000 hours

Product description:

- CLASS 1 - DIVISION 1 - GROUP C, D
  CLASS 1 - DIVISION 2 - GROUP A, B, C, D
  CLASS 2 - DIVISION 1 - GROUP E, F, G
  CLASS 2 - DIVISION 2 - GROUP F, G
  CLASS 3
- CAN / CSA-C22.2 NO. 137
- UL-844 Hazardous locations
  UL-924 Emergency lighting
  UL-1598A Marine outdoor
  UL-1598 Damp locations
  UL-8750 LED security
- 2 adjustable lighting heads from 0° to 180°.
- Wall installation.

Applications:

Explosion-proof emergency lighting.

info@technilight.ca

Pictures for illustration purpose only rev 2.3.12