TLLSUS8F80AD

LED strip

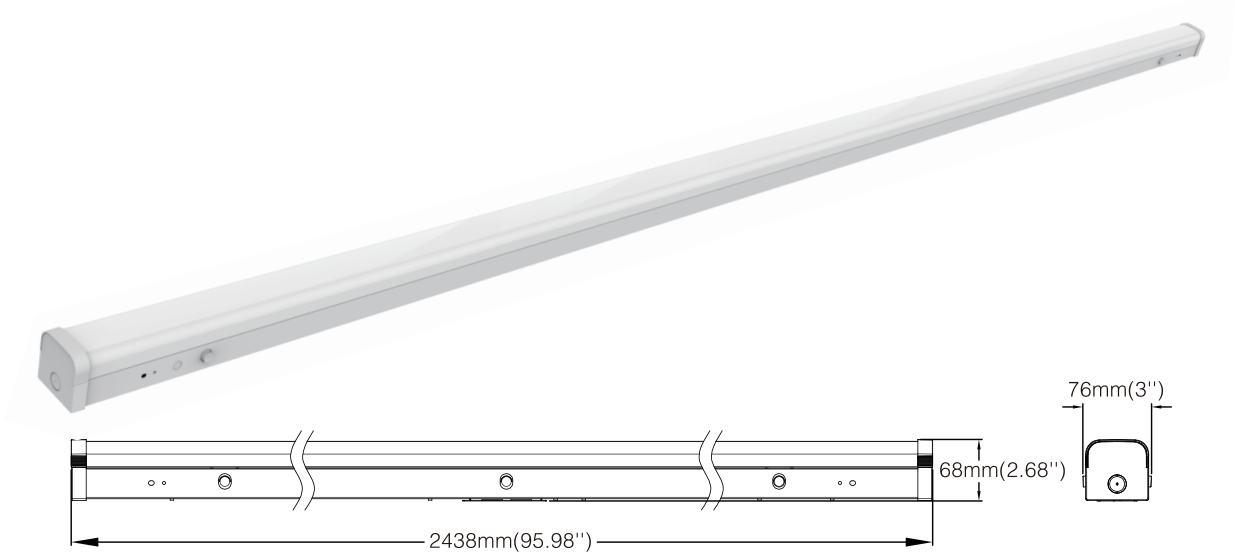

Specifications TLLSUS8F80AD

Electrical Specifications	
Model No.	TLLSUS8F80AD
DLC ID	S-DKFTXM
Power (W) selectable ± 10%	60W / 70W / 80W
Input Voltage (V)	AC 120-347V, 50/60Hz
Efficacy ± 3%	135 lm/W
Power Factor (PF)	0.924
Surge protection	N/A
Total harmonic distortion	<20%

Photometric Specifications		
CRI	83	
CCT selectable	3500K / 4000K / 5000K	
Beam angle	120°	
Light Output ± 3%	60W: 8100 lm	70W: 9450 lm
	80W: 10800 lm	
Dimmable	0-10V	

Mechanical Specifications	
IP Rating	IP20
Material	Steel + PC
Lens	Frosted
Net Weight	N/A
Product size (mm)	± 2438 x 76 x 68 mm
Product size (inch)	± 95.98" x 3" x 2.68"
Operating Humidity	10% - 90%
Operating Temperature	-25°C ~ 40°C
Lifespan (L70)	N/A

Product Description:

- Large supply voltage range 120-347V.
- Selectable power and CCT.
- Complies with standards:
  - UL1598
  - UL8750
  - CSA C22.2 No. 250.0-08
  - CSA C22.2 No. 250.0:21
  - CSA C22.2 No. 250.13
- Easy Installation with fast connection design, shorten the installation process and save labor cost.
- Save up in electricity consumption compared to fluorescent lighting fixture.
- Warranty: 5 years.
- It could be fitted with sensor.
- Ceiling installation or optional suspension kit, not included.
- Optional protective grid, not included.

Applications:

Suitable for houses, basements, warehouses, garages, shops, etc.

Optional accessory



TLSSR
Suspension kit

info@technilight.ca

Pictures for illustration purpose only rev 2.5.12