TLTDL6R15FRAWH

Fire rated recessed light

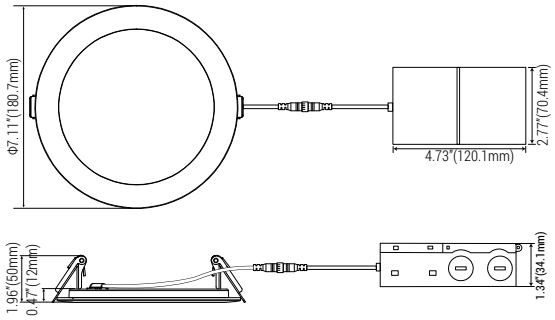





Specifications TLTDL6R15FRAWH

Electrical Specifications	
Model No.	TLTDL6R15FRAWH
Power (W) ± 10%	15 W
Input Voltage (V)	AC120 V, 60Hz
Efficacy ± 3%	80 lm/W
Power Factor (PF)	>0.9
Dimmable	Triac

Photometric Specifications	
CRI	90
CCT	Selectable
Beam angle	120°
Light Output ± 3%	1 200 lm

Mechanical Specifications	
IP Rating	Wet locations
Material	Aluminum + PMMA + PS
Lens	Frosted
Net Weight	N/A
Product size (mm)	± Ø180.7 x 12 mm
Product size (in)	± Ø7.11" x 0.47"
Operating Humidity	10% - 90%
Operating Temperature	-20°C~45°C
Lumen maintenance	81% at 100 000 hours

Product description:

- Ultra thin 6" recessed down light.
- Ø6 19/64" (160 mm) hole required for installation.
- 2 hours fire rating.
- Junction box with quick connector included.
- 5 CCT: selectable 2 700 K, 3 000 K, 3 500 K, 4 000 K et 5 000 K using a switch.
- Color: white.
- Optional installation plate.

Applications:

Homes, offices, schools, shopping centers, bathrooms, laundry rooms, porches, etc.

Optional accessory

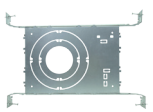 TLMP36HB	3" to 6" installation plate with fixing bars

info@technilight.ca

Pictures for illustration purpose only