TLWMBUS20ABK IP65

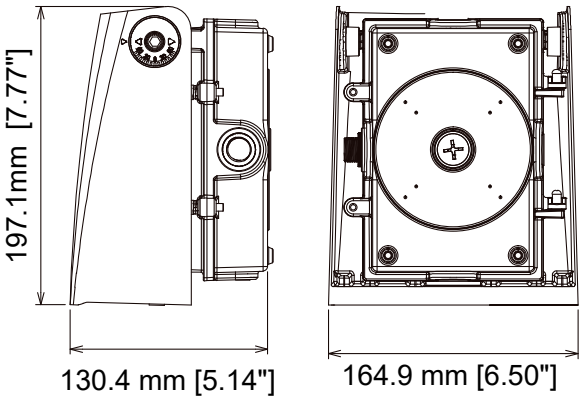

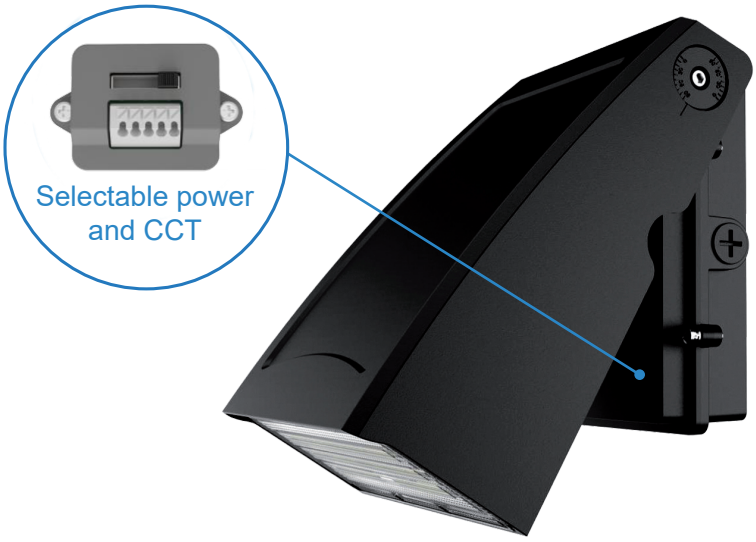

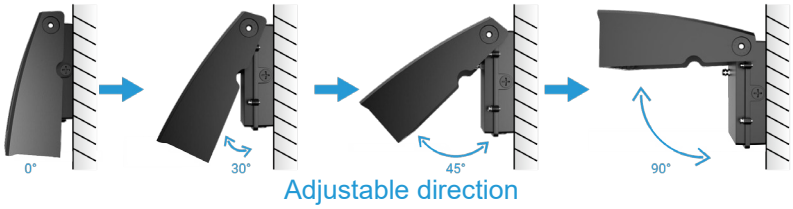

Specifications TLWMBUS20ABK

Electrical Specifications	
Model No.	TLWMBUS20ABK
DLC ID	S-Q9R77S
Power (W) selectable ±10%	8W / 10W / 15W / 20W
Input Voltage (V)	AC 120-347V, 50/60Hz
Efficacy ± 3%	150 lm/W
Power Factor (PF)	0.962
Surge protection	N/A
Total harmonic distortion	<15%
Dimmable	0-10V

Photometric Specifications		
CRI	73	
CCT selectable	3000K / 4000K / 5000K	
Beam angle	Type II	
Light Output ± 3%	8W: 1 200 lm	10W: 1 500 lm
	15W: 2 250 lm	20W: 3 000 lm

Mechanical Specifications	
IP Rating	IP65
Material	Aluminum
Lens	Polycarbonate
Net Weight	N/A
Product size (mm)	± 165 x 197 x 130 mm
Product size (inch)	± 6.5" x 7.77" x 5.14"
Operating Humidity	10% - 90%
Operating Temperature	-30°C ~ 45°C
Lumen maintenance	>79% at 100 000 hours

Product Description:

- Large supply voltage range 120-347V.
- Selectable power and CCT.
- Built-in photocell.
- Adjustable direction from 0 to 90 degrees.
- Die cast aluminum housing provides solid mounting to wall.
- Saves on electricity consumption compared to conventional lighting fixture.
- Color: black.
- Warranty: 5 Years.

Applications:

Perimeter lighting for safety and security. Use on factories, warehouses, commercial buildings, etc.

info@technilight.ca

Pictures for illustration purpose only rev 2.4.8