PM bracket TPALPMBK

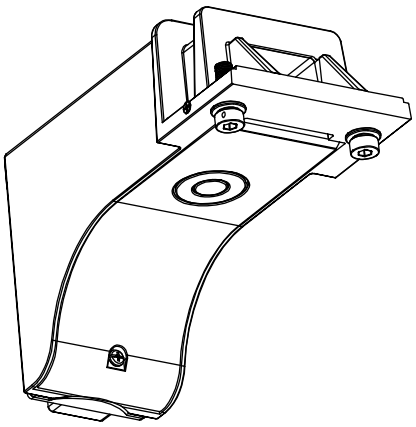

Dimensions

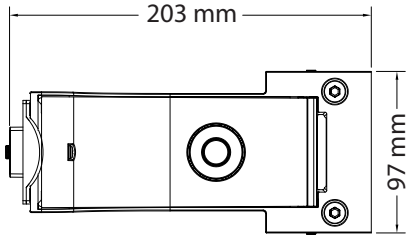

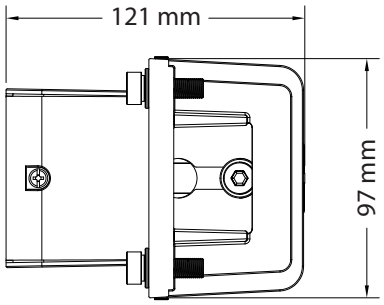

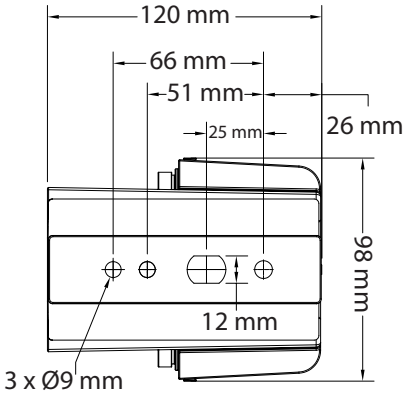

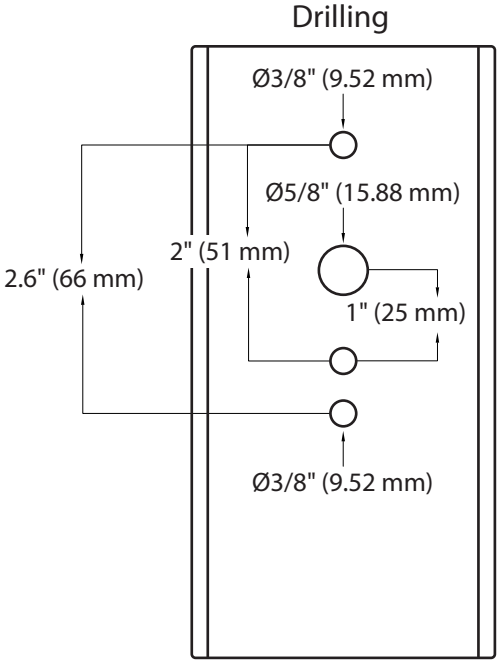

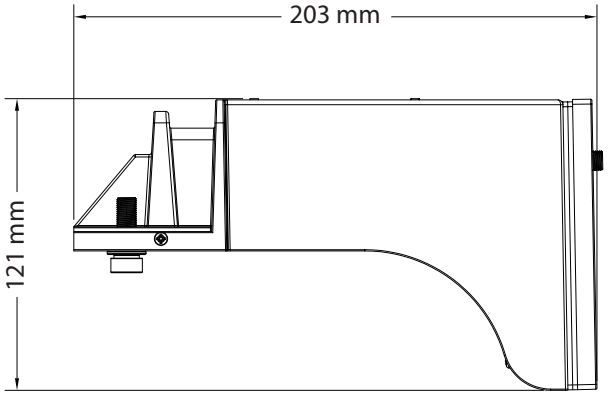

info@technilight.ca

Pictures for illustration purpose only

rev 2.4.7