TR bracket TPALTRBK

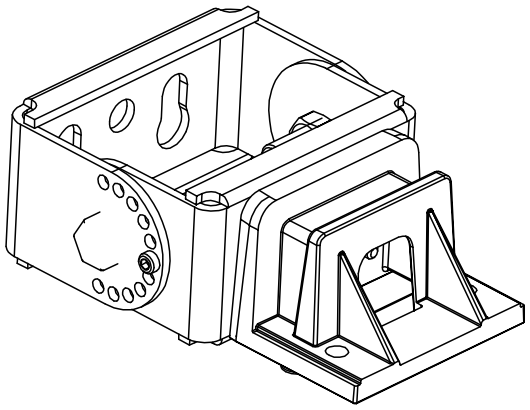

Dimensions

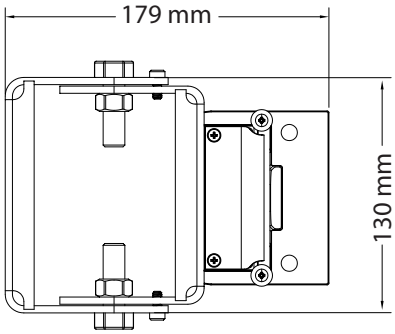

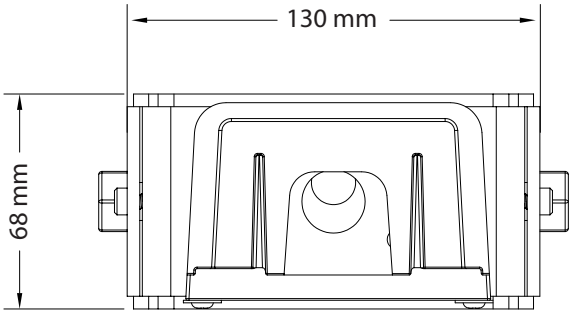

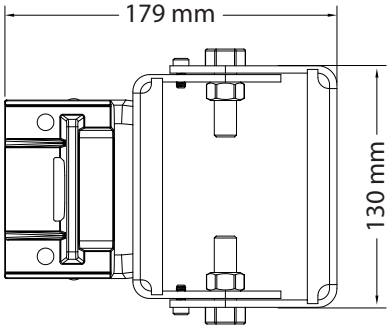

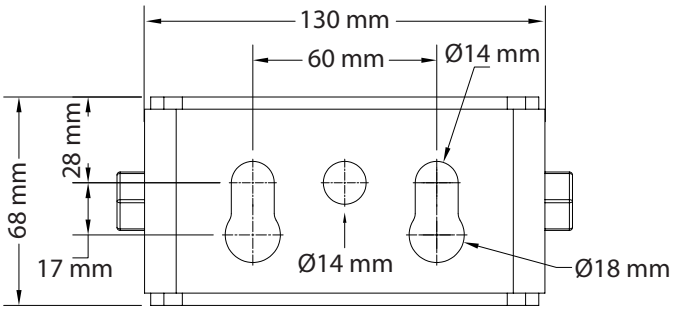

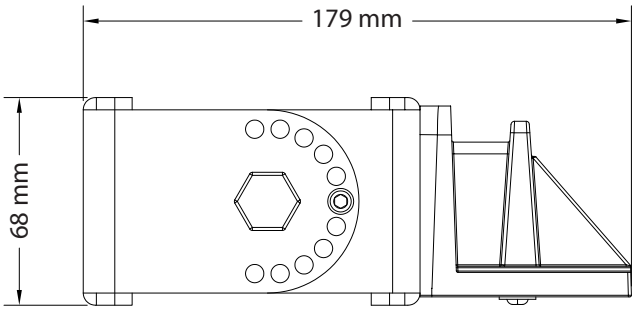

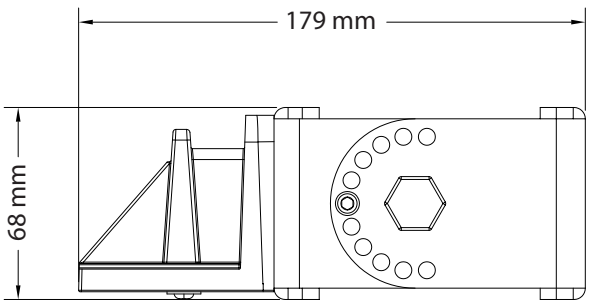

info@technilight.ca

Pictures for illustration purpose only rev 2.4.8