TPALUS300T4ABK

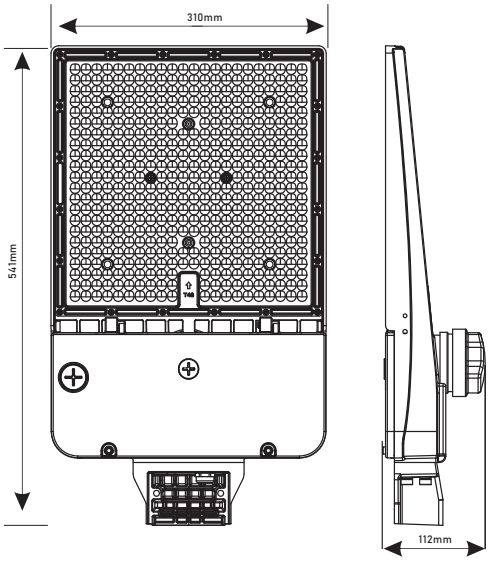

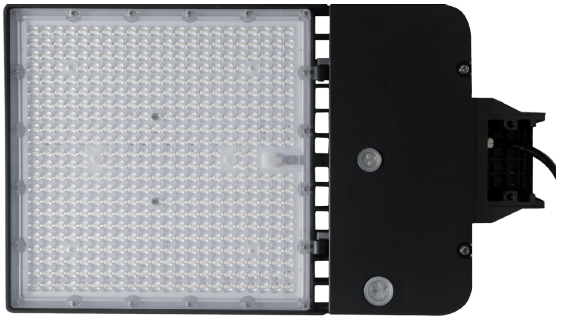

Built-in receptacle.
JL208, short-circuit cap included.
Photocell not included.



Specifiactions TPALUS300T4ABK

Electrical Specifications	
Model No.	TPALUS300T4ABK
DLC ID	S-FCR0P7
Power selectable	200W / 240W / 300W
Input Voltage (V)	AC120-347V, 50/60Hz
Efficacy ± 3%	133.34 lm/W
Power Factor	0.9
Dimmable	0-10 V
Surge protection	N/A
Total harmonic distortion	≤15%

Photometric Specifications	
CRI	81
CCT selectable	3000K / 4000K / 5000K
Beam angle	Type IV
Light Output ± 3%	Min.: 26 668 lm Max.: 40 002 lm
BUG rating	B4-U0-G5

Mechanical Specifications	
IP rating	IP66
Vibration resistance	3G
EPA	0.33 ft²
Material	Aluminum
Lens	PC
Net Weight	4.5 kg
Product size (mm)	± 541 x 310 x 112 mm
Product size (in)	± 21.3" x 12.2" x 4.4"
Operating Humidity	10% - 90%
Operating Temperature	-40°C ~ 50°C
Lumen maintenance	>80% at 100 000 hours

Accessories (not included)

 TPALPABK	Adjustable bracket for walls and square poles	 TPALPMBK	Bracket for walls, square or round poles	 TPALSFBK	"Slip fitter" bracket for 2 3/8" round poles
 TPALTRBK	Trunnion bracket	 TPALTU2BK	"U" bracket	 HD09VR-PHC-DG	PIR motion sensor
 HD06R	Remote control for motion sensor	 JL205C / JL207E	Photocell: AC120-277V #JL205C AC120-347V #JL207E	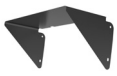 TPALBLS2BK	Light back shield

Product description:

- Selectable power and CCT.
- Integrated photocell receptacle. Short-circuit plug included. Photocell optional.
- Optional motion sensor.
- Easily replace traditional MH or HPS luminaire fixture.
- Powerful light efficacy.
- Saves in electricity consumption compared to fluorescent lighting fixture.
- 2 200 K available on request.
- Color: black. Other colors available on request.
- Warranty: 5 years.

Applications:

Outdoor parking and wide area.

Pictures for illustration purpose only rev 2.5.8