LED Flood Light Yoke Mount 15/25/35/45W

SKU: AA-700027UCCTW-YM



Description

The Elakeview Nebula LED Flood Light developed with Die-Cast aluminum housing and integrated dusk to dawn photocell is suitable for all exterior lighting projects.

Applications

- Industrial Spaces
- Commercial Lighting
- Arenas
- Sports Fields

Features

- Universal Input AC120-347V
- Multi CCT: 3000K/4000K/5000K
- Wattage Selectable: 15/25/35/45W
- Built-in Dust to Dawn Photocell
- Can Mount in Any Angle with Yoke Mount
- 4/6KV Surge Protector, Class 2 Driver
- Water-Resistant Rated: IP65
- Long rated lifetime of over 70,000 hours (L70)
- DLC 5.1 P, cUL Listed,
- 10-Year Warranty

Ordering Information

SKU	Model	DLC Product ID	Voltage	Wattage	Efficacy	Lumens	CCT	Size
AA-700027UCCTW-KM	FL45WUCCTW	FL45WUCCTW	120-347V	15/25/35/45W	140LM/W	2100/3500/4900/6300LM	3000/4000/5000K	5.5 x 4.9 x 1.7”
AA-700027UCCTW-YM	FL45WUCCTW	FL45WUCCTW	120-347V	15/25/35/45W	140LM/W	2100/3500/4900/6300LM	3000/4000/5000K	5.5 x 4.9 x 1.7”
AA-700031UCCTW-KM	FL95WUCCTW	FL95WUCCTW	120-347V	50/60/75/95W	140LM/W	7000/8400/10500/13300LM	3000/4000/5000K	11.4 x 7.5 x 2.6”
AA-700031UCCTW-YM	FL95WUCCTW	FL95WUCCTW	120-347V	50/60/75/95W	140LM/W	7000/8400/10500/13300LM	3000/4000/5000K	11.4 x 7.5 x 2.6”

Dimensions

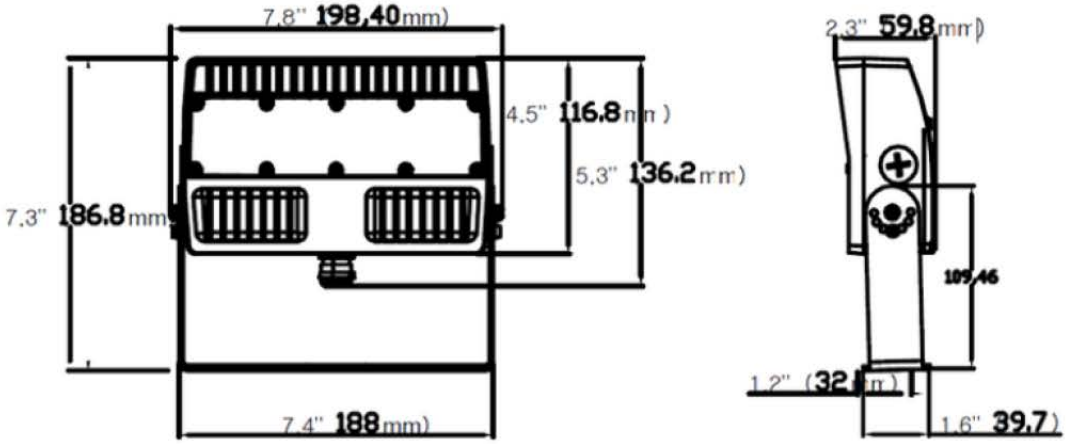

Mounting Types



Knuckle Mount
SKU: AA-700027UCCTW-KM



Yoke Mount
SKU: AA-700027UCCTW-YM