LED Area Light 60/80/100W 3500/4100/5000K

SKU: AA-700056UCCTW



Description

The Elakeview LED Area Light developed with Die-Cast aluminum housing and an integrated receptacle for photocells/motion sensors is suitable for all exterior lighting projects.

Features

- AC120-347V
- 6KV/10KV surge protector, Class 2 driver w/ overtemperature protection
- Color temperature Selectable: 3500/4100/5000K
- Wattage Selectable: 60/80/100W
- 0- 10V Continuous dimming
- W/receptacle f/Photocell/ motion sensor
- Pressure Relief Respirator
- Quick release access cover
- Various mounting options
- L70 - 70,000 Hours
- 10 Year warranty
- DLC 5.1 P, IP65 rated, cETL Listed

Applications

Industrial Spaces

Commercial Lighting

Parking Lots

Street Lighting

Ordering Information

SKU	Model	DLC Product ID	Voltage	Wattage	Efficacy	Lumens	CCT	Finish	Size
AA-700056UCCTW	AL100WUCCTW	S-66H8RP	AC120-347V	60/80/100W	150LM/W	9000/12000/15000LM	3500/4100/5000K	Dark Brown	13 X 23.3 X 2.5"
AA-700057UCCTW	AL150WUCCTW	S-Q5HM1X	AC120-347V	100/120/150W	150LM/W	15000/18000/22500LM	3500/4100/5000K	Dark Brown	13 X 23.3 X 2.5"
AA-700057UCCTW-WHITE	AL150WUCCTW	S-Q5HM1X	AC120-347V	100/120/150W	150LM/W	15000/18000/22500LM	3500/4100/5000K	White	13 X 23.3 X 2.5"
AA-700015UCCTW	AL200WUCCTW	S-5NWGS9	AC120-347V	150/200/240W	150LM/W	22500/30000/36000LM	3500/4100/5000K	Dark Brown	13 X 23.3 X 2.5"
AA-700058UCCTW	AL300WUCCTW	S-CNP02S	AC120-347V	300/420W	155LM/W	45000/63000LM	3500/4100/5000K	Dark Brown	24.8 X 29.7 X 2.4"

SKU	Description
AA-700059AL	U Bracket
AA-700060SU	Slip Fitter
AA-700061SU	Adjustable Horizontal Arm
AA-700060U3in1	3 In 1 Universal Slip Fitter

Dimensions

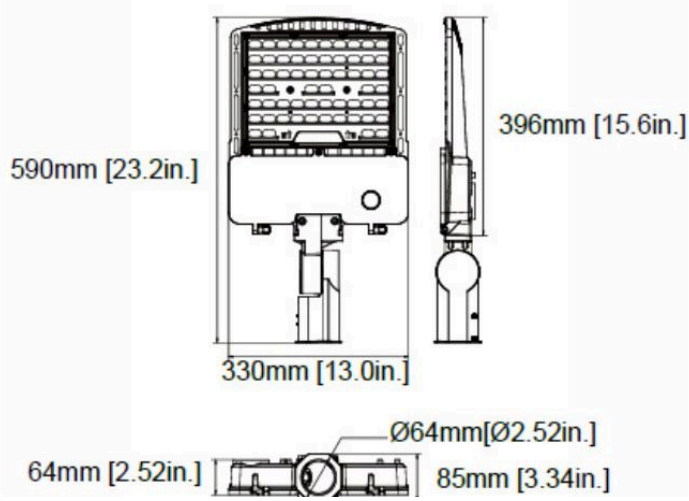

Mounting Types

Sold Separately



U Bracket
SKU: AA-700059AL



Slip Fitter
SKU: AA-700060SU



Adjustable Horizontal Arm
SKU: AA-700061SU



3 In 1 Universal Slip Fitter
SKU: AA-700060U3in1

Accessories

Sold Separately



Photocell Sensor
SKU: AA-Photocell-ANT54TPC



Bi-Level Microwave Sensor
SKU: HBUMCSENSOR-DC12V



Wireless Handheld Configuration Tool
Model: RC-100

Reflectors

Sold Separately



Area Light Full Shield
SKU: AA-ALSHIELD01

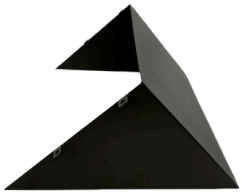

Area Light 3-Way Shield
SKU: AA-ALSHIELD04