# LED T8 Tube Bypass 7W 3500/4000/5000K 2FT

SKU: AA-600623UCCT



## Description

The new LED Type B bypass T8 is direct replacement for traditional fluorescent T8 tubes, providing instant, flicker-free illumination with lower energy costs.

## Applications

Replaces Traditional Fluorescent T5s

- Industrial Spaces
- Commercial Lighting
- Schools
- Retail Stores

## Features

- AC120-347V
- LED T8 Type B Bypass
- Single & Double End Input
- Color Temperature Selectable: 3500/4000/5000K
- Wattage: 7W
- CRI: >80
- Triac Dimming @ 120V
- Operating Temperature: -20ºC To 45ºC
- High Lumen Efficiency
- Suitable For Damp Locations
- Lifetime: 50,000 Hours
- DLC 5.1, UL & CUL Classified
- Efficacy: 152LM/W
- 10 Year Warranty, Extended Warranty Available

## Ordering Information

| SKU | Model | DLC Product ID | CRI | Voltage | Wattage | Efficacy | Lumens | CCT | Socket | Finish | Size |
|---|---|---|---|---|---|---|---|---|---|---|---|
| AA-600054U-TYPEB | CH1192H-46-25W 850-1 | S-NP210V | >80 | AC120-347V | 25W | 140LM/W | 3400LM | 5000K | G5 | White | 4 FT |
| AA-600054U-TYPEB-4K | CH1172HT-36-12W 83550-07 | CH1172HT | >80 | AC120-347V | 12W | 120LM/W | 1500-1600LM | 3500/4000/5000K | G13 | White | 3 FT |
| AA-600602UCCT | CH1172HT-36-12W 83550-07 | S-PB2DHM | >80 | AC120-347V | 12W | 120LM/W | 1500-1600LM | 3500/4000/5000K | G13 | White | 3 FT |
| AA-600618UCCT | CH1172HT-48-15W 83550-07 | S-5LSKQG | >80 | AC120-347V | 15W | 140LM/W | 2000-2200LM | 3500/4000/5000K | G13 | White | 4 FT |
| AA-600622UCCT | CH1172HT-48-11.5W 83550-07 | S-6ISUMR | >80 | AC120-347V | 11.5W | 152LM/W | 1650-1800LM | 3500/4000/5000K | G13 | White | 4 FT |
| AA-600623UCCT | CH1172HT-24-7W 83550-07 | CH1172HT | >80 | AC120-347V | 11.5W | 152LM/W | 1100LM | 3500/4000/5000K | G13 | White | 2 FT |

## Dimensions

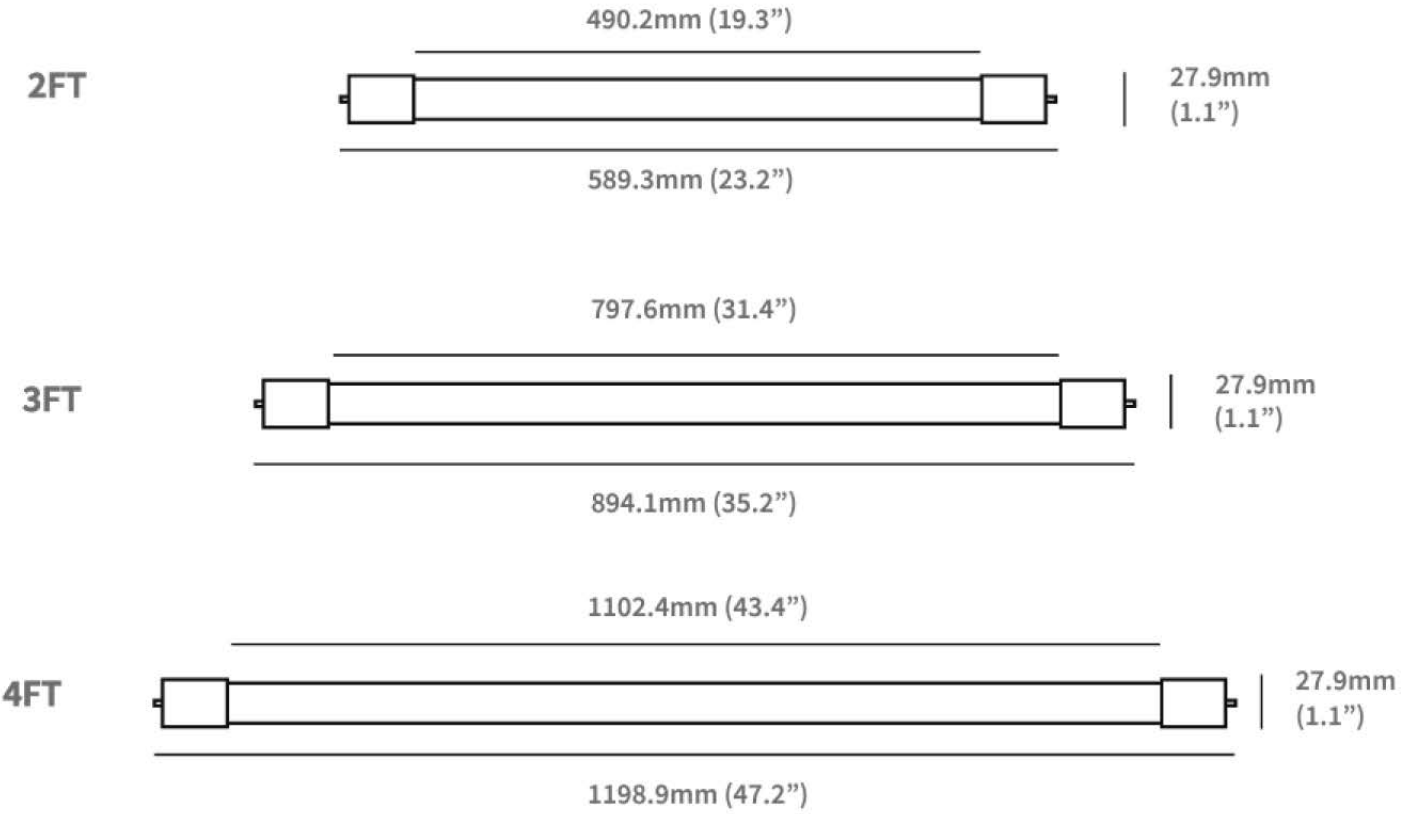
2FT
490.2mm (19.3")
27.9mm
(1.1")
589.3mm (23.2")
3FT
797.6mm (31.4")
27.9mm
(1.1")
894.1mm (35.2")
4FT
1102.4mm (43.4")
27.9mm
(1.1")
1198.9mm (47.2")